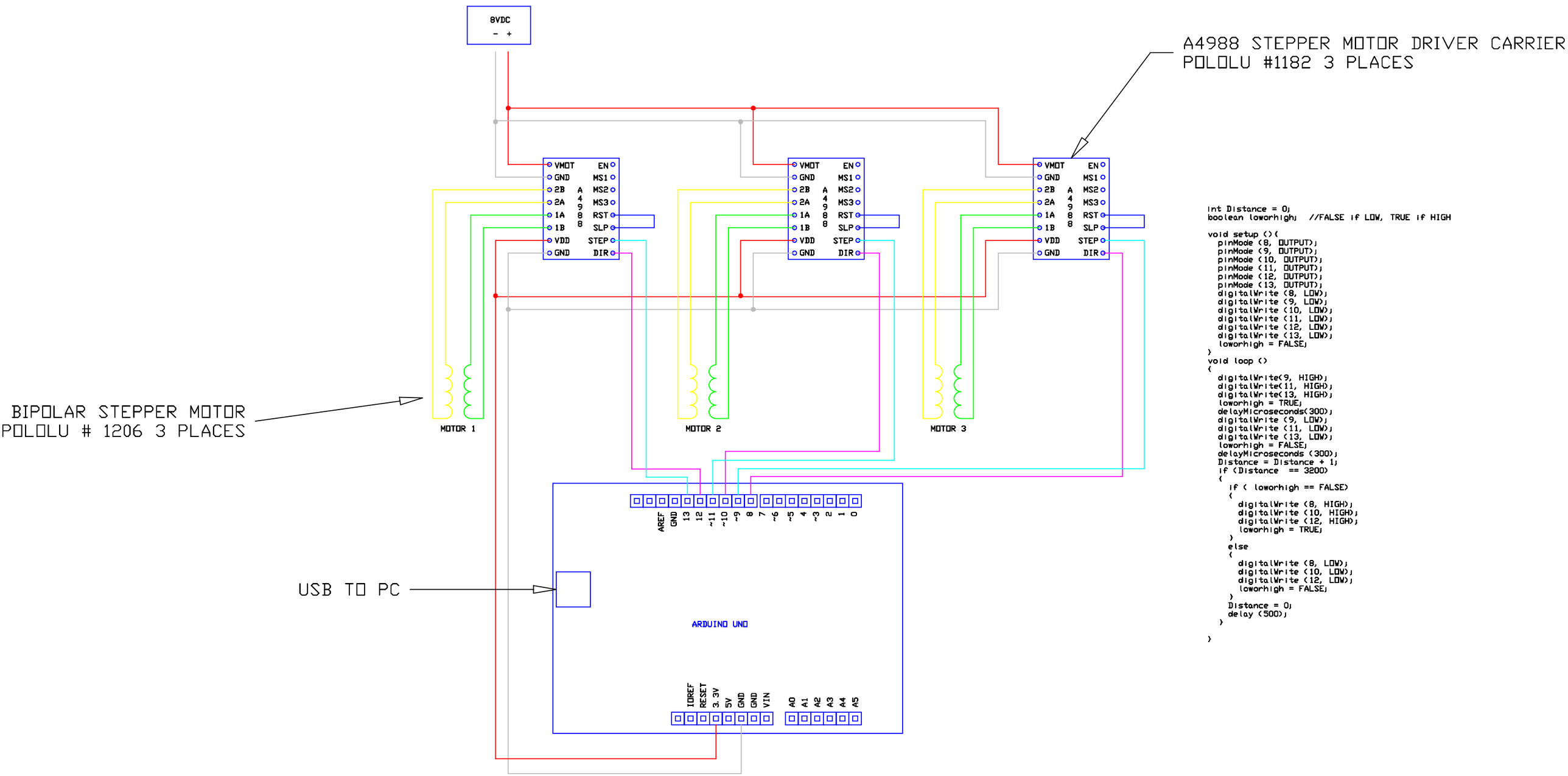


```
int Distance = 0;
boolean loworhigh;  //FALSE if LOW, TRUE if HIGH

void setup (){
  pinMode (8, OUTPUT);
  pinMode (9, OUTPUT);
  pinMode (10, OUTPUT);
  pinMode (11, OUTPUT);
  pinMode (12, OUTPUT);
  pinMode (13, OUTPUT);
  digitalWrite (8, LOW);
  digitalWrite (9, LOW);
  digitalWrite (10, LOW);
  digitalWrite (11, LOW);
  digitalWrite (12, LOW);
  digitalWrite (13, LOW);
  loworhigh = FALSE;
}
void loop ()
{
  digitalWrite(9, HIGH);
  digitalWrite(11, HIGH);
  digitalWrite(13, HIGH);
  loworhigh = TRUE;
  delayMicroseconds(300);
  digitalWrite (9, LOW);
  digitalWrite (11, LOW);
  digitalWrite (13, LOW);
  loworhigh = FALSE;
  delayMicroseconds (300);
  Distance = Distance + 1;
  if (Distance  == 3200)
  {
    if ( loworhigh == FALSE)
    {
      digitalWrite (8, HIGH);
      digitalWrite (10, HIGH);
      digitalWrite (12, HIGH);
      loworhigh = TRUE;
    }
    else
    {
      digitalWrite (8, LOW);
      digitalWrite (10, LOW);
      digitalWrite (12, LOW);
      loworhigh = FALSE;
    }
    Distance = 0;
    delay (500);
  }

}
```